Ransburg®

SERVICE MANUAL EN

PA-18-03

Binks

ELITE SPRAY CART SYSTEM

For additional information or copies of your service manual, please visit us online at:

binks.com/en/library

Or use this QR code with your mobile device:

ELITE CART SPRAY SYSTEM

Obey local or municipal regulations for product recycling and disposal.

02 CONTENTS

03 SAFETY **1-8**

SAFETY PRECAUTIONS 1
ADDITIONAL SAFETY INFORMATION 8

04 ATEX/FM **9-10**

05 PRODUCT OVERVIEW **11-18**

ELITE CART SYSTEM INTRODUCTION 11
FEATURES 12
TECHNICAL SPECIFICATIONS 14
PRODUCT DESCRIPTION 16
T9 INJECTOR 17
ELITE INJECTOR 28

06 INSTALLATION **19-24**

ASSEMBLY INSTRUCTIONS 20
FLUIDIZED HOPPER OPTION 24

07 OPERATION **25-26**

COLOR CHANGE CLEANING PROCESS 25

08 TROUBLESHOOTING **27-28**

TROUBLESHOOTING GUIDE 27

09 PARTS IDENTIFICATION **29-40**

VIBRATORY BOX FED ELITE CART PARTS LIST 30
ELITE INJECTOR PARTS LIST 31
SUCTION PIPE PARTS LIST 32
FLUIDIZED HOPPER FED ELITE CART PARTS LIST 34
T9 INJECTOR PARTS LIST 35
FLUIDIZED BOX PARTS LIST 36
POWDER HOSE SET ASSEMBLY 37
POWDER HOSE ANTISTATIC 38
APPLICATOR HAND CABLE 38
APPLICATOR AIR TUBING 38
AIR HOSE PARTS LIST 39
FLUIDIZED HOPPER AIR HOSE PARTS LIST 39

10 MANUAL REVISIONS **41**

11 WARRANTY **44**

This page intentionally left blank.

03 SAFETY

03.1 SAFETY PRECAUTIONS

Before the operation, maintenance, or servicing of this Binks system; fully read and understand all technical and safety literature for your product. This manual contains information that is important for you to know and understand.

This information relates to USER SAFETY and the PREVENTION OF EQUIPMENT PROBLEMS.

To help you understand this information, we use recognizable ANSI Z535 and ISO warning boxes and symbols throughout this manual. Please obey these safety sections.

⚠ DANGER

DANGER!: Indicates a hazardous situation that, if not avoided, will result in death or severe injury.

⚠ WARNING

WARNING!: Indicates a hazardous situation that, if not avoided, could result in death or severe injury.

⚠ CAUTION

Caution!: Indicates a hazardous situation that, if not avoided, could result in minor or moderate injury, or equipment damage.

NOTICE

Notice: Indicates information considered important but not hazard related.

SAFETY

Safety: Indicates a type of safety instruction, or a separate panel on a safety placard, where specific safety-related instructions or procedures are described.

Careful study and continued use of this manual will provide a better understanding of the equipment functions and procedures.

This understanding will result in improved operation, efficiency, and longer, trouble-free service with faster and easier troubleshooting. If you need the necessary safety literature for your specific system, contact your local Binks representative or Binks directly.

NOTICE

This manual lists standard specifications and service procedures. Differences can occur between this literature and your equipment.

Differences in local or municipal codes, manufacturer or plant requirements, material delivery requirements, and more can make variations unpreventable. To find these differences, compare this manual to your system installation drawings and other applicable Binks equipment manuals.

⚠ WARNING

The user MUST read and be familiar with the Safety Section in this manual and the safety literature therein identified.

Only trained personnel can operate this equipment.

All personnel who operate, clean, or maintain this equipment MUST fully read and understand this manual! To operate and service the equipment, follow all WARNINGS and safety requirements.

The user must be aware of and adhere to ALL local building and fire codes and ordinances, as well as NFPA 33 AND EN 16985 SAFETY STANDARDS, LATEST EDITION, or applicable country safety standards, before the installation, operation, or servicing of this equipment.

⚠ WARNING

The hazards shown on the pages that follow can occur during the normal use of this Binks equipment, but not all listed hazards will be applicable to your product model or equipment.

Repairs may only be performed by personnel authorized by Binks.

AREAS Indicate possible hazard occurrences.	HAZARDS Indicate possible hazards.	SAFEGUARDS Prevention of possible hazards.
Spray Areas 	**Fire Hazards** Improper or unsatisfactory operation and maintenance procedures will cause a fire hazard. If the safety interlocks are disabled during operation, protection against accidental arcing is shut off and can cause a fire or explosion. Frequent Power Supply or Controller shutdown identifies a problem in the system. For this occurrence, a correction will be necessary	Fire extinguishing equipment must be present in the spray area. Periodically run a test to make sure the equipment stays usable. Keep spray areas clean to prevent the build-up of combustible residues. Do not smoke in the spray area. The high voltage supplied to the atomizer must be turned off before the equipment is cleaned, flushed or maintained. Spray booth ventilation must be kept at the rates as set by NFPA-33, OSHA, country, local, and municipal codes. If flammable or combustible solvents are used to clean the equipment, ventilate the area. Prevent electrostatic arcing. Maintain spark-safe work distance between the parts that get coated and the applicator. A span of one inch for every 10KV of the output voltage is necessary. Do an equipment test only in areas free of combustible material. The test may necessitate the high voltage to be on, but only as instructed. Non-factory replacement parts or unauthorized equipment modifications can cause a fire or injury. The key switch bypass is used only during setup operation. Do no production work with disabled safety interlocks. Set up and operate the paint procedure and equipment under NFPA-33, NEC, OSHA, local, municipal, country, and European Health and Safety Norms.

AREAS Indicate possible hazard occurrences.	**HAZARDS** Indicate possible hazards.	**SAFEGUARDS** Prevention of possible hazards.
Spray Areas 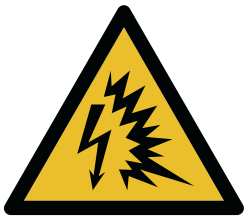 	**Explosion Hazard** Improper or unsatisfactory operation and maintenance procedures will cause a fire or explosion hazard. If the safety interlocks are disabled during operation, protection against accidental arcing is shut off and can cause a fire or explosion. Frequent Power Supply or Controller shutdown identifies a problem in the system. For this occurrence, a correction will be necessary.	Prevent electrostatic arcing. Maintain spark-safe work distance between the parts that get coated and the applicator. A span of one inch for every 10KV of output voltage is necessary. Unless specifically approved for use in hazardous locations, put all electrical equipment outside of Class I or II, Division 1 or 2 hazardous areas in accordance with NFPA-33, or outside of Zone 2 or Zone 22 in accordance with EN standards. If equipped, set the current overload sensitivity as described in the related section of the equipment manual. If incorrectly set, the current overload sensitivity for protection against accidental arcing is turned off and can cause a fire or explosion. Frequent power supply shutdown indicates a problem in the system, which requires correction. Always turn off the control panel power before the system is flushed, cleaned, or servicing the spray system equipment. Make sure no objects are within the spark-safe work distance before the high voltage is turned on. The control panel must interlock with the ventilation system and conveyor in accordance with NFPA-33, EN 50176. Fire extinguishing equipment must be present in the spray area. Periodically run a test to make sure the equipment stays usable. Do an equipment test only in areas free of combustible material.
General Use and Maintenance 	Improper or unsatisfactory operation and maintenance procedures will cause a fire hazard. Personnel must be correctly trained in the operation and maintenance of this equipment.	Train all personnel in accordance with the requirements of NFPA-33, EN 60079-0. Before equipment operation, personnel must read and understand these instructions and safety precautions. Obey appropriate local, municipal, state, and national codes governing ventilation, fire protection, operation maintenance, and housekeeping. Reference OSHA, NFPA-33, EN Norms, and your insurance company requirements.

AREAS Indicate possible hazard occurrences.	HAZARDS Indicate possible hazards.	SAFEGUARDS Prevention of possible hazards.
Spray Area High Voltage Equipment 	**Electrical Discharge** This equipment contains a high-voltage device that can cause an electrostatic induction on ungrounded objects. This electrical charge is capable of igniting coating materials. Insufficient ground will cause a spark hazard. A spark can ignite many coating materials and cause a fire or explosion.	Operators in the spray area and the parts to be sprayed must be sufficiently grounded. All conductive objects inside the spray area must be grounded. Hold the parts that get sprayed on conveyors or hangers that are correctly grounded. The resistance between the parts and the earth-ground must not be more than 1 MΩ. Refer to: NFPA-33. Before the equipment is operated, ground all operators. They cannot wear rubber-soled insulated shoes. Wear ground straps on wrists or legs for sufficient ground contact. Operators must not wear or carry ungrounded metal objects. When used, operators must make complete contact with the applicator handle and electrostatic gun. Use conductive gloves or gloves with the palm section cut out. Operators must wear grounded footwear. **NOTE: REFER TO NFPA-33 OR SPECIFIC COUNTRY SAFETY CODES FOR GUIDANCE TO CORRECTLY GROUND THE OPERATOR.** Except for objects needed for the high-voltage process, all electrically conductive objects in the spray area are to be grounded. Supply a grounded conductive floor in the spray area. Always turn off the applicator voltage before the system is flushed, cleaned, or when servicing the spray system equipment. Unless specifically approved for use in hazardous locations, put all electrical equipment outside of Class I or II, Division 1 or 2 hazardous areas in accordance with NFPA-33, or outside of Zone 2 or Zone 22 in accordance with EN standards. Do not install an applicator into a fluid system if the solvent supply is ungrounded. Do not touch an energized applicator electrode.

AREAS Indicate possible hazard occurrences.	**HAZARDS** Indicate possible hazards.	**SAFEGUARDS** Prevention of possible hazards.
Spray Areas 	**Toxic Fluid or Fumes** Toxic fluids or fumes can cause severe injury or death if splashed in the eyes or on the skin, or if inhaled or swallowed.	Read the Safety Data Sheet (SDS) for instructions to know and understand how to handle the specific hazards of the fluids used, and the effects of long-term exposure. During the spray, clean, or servicing of equipment, or when in the work area, keep the work area fully ventilated. Always wear personal protective equipment (PPE) when in the work area or during equipment operation. Refer to the Personal Protective Equipment warnings in this manual. Store hazardous fluid in approved containers and refer to local, municipal, state, and national codes governing the disposal of hazardous fluids.
Spray Area and Equipment Use 	High-pressure fluid sprayed from the gun, hose fittings, or ruptured/damaged components can pierce the skin. While this injury can appear as cut skin, this is a severe injury that can result in the amputation of the affected area.	Do not point or operate the spray gun at the body part of a person. Do not put your hand or fingers over the gun fluid nozzle or fittings in the hose or Proportioner. Do not try to stop or deflect leaks with your hand, glove, body, or shop rag. Do not “blowback” fluid, as the equipment is not an air spray system. Relieve pressure in the supply hoses, Proportioner, and QuickHeat™ hose before the equipment is inspected, cleaned, or serviced. Use the lowest possible pressure to recirculate, purge, or troubleshoot the equipment. Examine the hoses, couplings, and fittings every day. Service or immediately replace parts that leak, are worn, or are damaged. Replace high-pressure hose sections. They cannot be recoupled or serviced.

AREAS Indicate possible hazard occurrences.	HAZARDS Indicate possible hazards.	SAFEGUARDS Prevention of possible hazards.
Equipment and Fluids 	**Skin and Clothing Burns** Equipment surfaces and fluids can become very hot during operation.	Do not touch hot fluid or equipment during operation. Do not let clothing touch the equipment during operation or immediately after the equipment is stopped. Let the equipment fully cool before the examination or servicing of the component.
Pressurized Aluminum Parts 	The use of certain solvents and chemicals can cause equipment damage and severe personal injury.	Do not use 1,1,1-trichloroethane, methylene chloride or other halogenated hydrocarbon solvents or fluids that contain such solvents. These solvents can cause a severe chemical reaction and equipment rupture that results in equipment and property damage, serious bodily injury, or death.

AREAS Indicate possible hazard occurrences.	**HAZARDS** Indicate possible hazards.	**SAFEGUARDS** Prevention of possible hazards.
Spray Areas 	**Do Not Touch** The effect of paint flow rates and formulations on the quality of atomization can cause the turbines to rotate at high speeds.	Do not use a rag or gloved hand against the bell edge to stop or slow down a bell during rotation. Do not try to clean the bell edge during rotation.

⚠ CAUTION

Only operate the equipment after you have read this section.

03.2 ADDITIONAL SAFETY INFORMATION

Observe all local or municipal safety measures and wear approved protective equipment when servicing this equipment. Clean all spilled chemicals and materials and do all work in a clean and organized environment to prevent personal injury and equipment damage.

⚠ DANGER

To prevent injury or electrocution while the system is under power, do not contact, disconnect, or manipulate electrical connections or devices. The main disconnect on the right side of the controller can be locked out. Follow the proper Lockout–Tagout (LOTO) procedures for internal controller electrical work.

Only qualified electrical personnel can perform the work if diagnosis and troubleshooting are not possible during working conditions.

⚠ WARNING

To prevent possible chemical spillage when personnel are not on site, air and fluid supplies for the equipment must be disabled when the equipment idles for an extended period, such as an end-of-day shutdown.

NOTICE

During the initial commission of the equipment and at periodic times throughout equipment life, visually examine all fluid fittings for leaks.

Periodically, it is necessary to visually examine all pieces of this equipment for signs of noticeable degradation due to chemicals or other conditions in the equipment's environment.

SAFETY

Obey local or municipal regulations that require installed fire suppression for equipment operation.

If the operation of this equipment, sensors, switches, or other ancillary equipment occurs in the presence of flammable gases and vapors, connect this equipment through intrinsic-safe or Zener barriers. Classify them as a 'simple apparatus' or approve them for use in these areas.

ATEX/FM

EUROPEAN ATEX DIRECTIVE 2014/34/EU, ANNEX II, UKSI 2016: 1107 (AS AMENDED)

The following instructions apply to equipment covered by certificate number FM 19ATEX0004X

1. The equipment may be used with ignitable powders with apparatus groups II.
2. The equipment is only certified for use in ambient temperatures in the range +10°C to +40°C and should not be used outside this range.
3. Installation shall be carried out by suitably trained personnel in accordance with the applicable code of practice e.g. EN 60079-14:2014. Power cord must be plugged into power source outside all classified zones.
4. Inspection and maintenance of this equipment shall be carried out by suitably trained personnel in accordance with the applicable code of practice e.g. EN 60079-17, EN 50050-2, EN 50177.
5. Repair of this equipment shall be carried out by suitable trained personnel in accordance with the applicable code of practice e.g. EN 60079-19
6. Putting into service, use, assembling, and adjustment of the equipment shall be fitted by suitably trained personnel in accordance with the manufacturer's documentation. The instructions must be followed in order to avoid possible electrostatic charging hazards.

   Refer to the "Table of Contents" of this service manual:

   a. Installation
   b. Operation
   c. Maintenance
   d. Parts Identification

7. Components to be incorporated into or used as replacement parts of the equipment shall be fitted by suitably trained personnel in accordance with the manufacturer's documentation.
8. The certification of this equipment relies upon the following materials used in its construction:

   If the equipment is likely to come into contact with aggressive substances, then it is the responsibility of the user to take suitable precautions that prevent it from being adversely affected, thus ensuring that the type of protection provided by the equipment is not compromised.

   Aggressive substances: e.g. acidic liquids or gases that may attack metals, or solvents that may affect polymeric materials.

   Suitable precautions: e.g. regular checks as part of routine inspections or establishing from the material's data sheets that it is resistant to specific chemicals.

   Refer to "Specifications" in the "Introduction" section:

   a. High voltage cascade is encapsulated with a solvent resistant epoxy.

9. Refer to the instructions indicated below for specific conditions of use. They are the same for the cart systems and controller:
   a. Applicator manual PA-17-08
   b. Controller manual PA-19-08
   c. Vibration Motor certificate numbers:
      1. ATEX: ITS17ATEX102020X
      2. IECEX: IECEX TUN 12.0023
10. The characteristics of the equipment shall be detailed.
    e.g. electrical, pressure, and voltage parameters.

The manufacturer should note that, on being put into service, the equipment must be accompanied by a translation of the instructions in the language or languages of the country in which the equipment is to be used and by the instructions in the original language.

This page intentionally left blank.

ELITE CART SPRAY SYSTEM INTRODUCTION

805700 - AAAA B C - ZZ Y W

- **W** — Controller Type
- **Y** — Language Pack
- **ZZ** — Controller/Plug Assembly
- **C** — Applicator 2 Powder Hose Set Assembly
- **B** — Applicator 1 Powder Hose Set Assembly
- **AAAA** — Controller/Applicator/Cart Assembly
- **805700** — Base Model Number

Single Applicator, Single Controller, Vibratory Box Feed Cart

Dual Applicator, Dual Controller, Vibratory Box Feed Cart

Single Applicator, Single Controller, Fluidized Hopper Feed Cart

Dual Applicator, Dual Controller, Fluidized Hop-per Feed Cart

FEATURES

ELITE CART - TABLE OF "AAAA" DASHES	
"AAAA" Dash No.	"AAAA" Description
1VB1	Single Controller/ Applicator, Vibratory Box Fed, 120V Elite Cart
1VB2	Single Controller/ Applicator, Vibratory Box Fed, 230V Elite Cart
2VB1	Dual Controller/ Applicator, Vibratory Box Fed, 120V Elite Cart
2VB2	Dual Controller/ Applicator, Vibratory Box Fed, 230V Elite Cart
1FH1	Single Controller/ Applicator, Fluidized Hopper Fed, 120V Elite Cart
1FH2	Single Controller/ Applicator, Fluidized Hopper Fed, 230V Elite Cart
2FH1	Dual Controller/ Applicator, Fluidized Hopper Fed, 120V Elite Cart
2FH2	Dual Controller/ Applicator, Fluidized Hopper Fed, 230V Elite Cart

POWDER HOSE SET - TABLE OF "B" and "C" DASHES		
"B" and "C" Dash No.	"B" and "C" Description	Part No.
0	No Powder Hose/Cable Set	-
1	Powder Hose Set 6m/19ft	610139-06
2	Powder Hose Set 10m/32ft	610139-10
3	Powder Hose Set 16m/52ft	610139-16

NOTICE

Single controller "C" will be zero.

“W” Controller

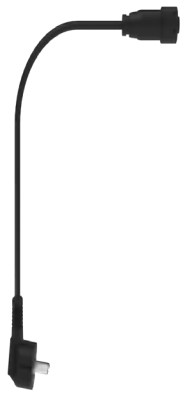

“ZZ” Plug

CONTROLLER / PLUG ASSEMBLY - TABLE OF "ZZ" DASHES		
"ZZ" Dash No.	"ZZ" Description	Part No.
00	None	-
01	EU Plug Assembly	460147
02	North America / Japan Plug Assembly	460149
03	China Plug Assembly	460150
04	Switzerland Plug Assembly	460148
05	UK Plug Assembly	461881

LANGUAGE PACK - TABLE OF "Y" DASHES		
"Y" Dash No.	"Y" Description	Part No.
1	English, French, Spanish, Portugese, Italian, German, Chinese, Japenese (General Language Pack)	-
2	English, French, Spanish, Italian, German, Czech, Polish, Russian (Eastern European Language Pack)	-

CONTROLLER TYPE - TABLE OF "W" DASHES		
"W" Dash No.	"W" Description	Part No.
1	Basic	461959-XXXXB
2	Deluxe	461959-XXXXD

⚠ CAUTION

Only use Power Cable Elite US (460149) with 120V vibrator motor. All other cables are for use with 230V.

TECHNICAL SPECIFICATIONS

Certificates	
US Certificate	FM18US0005
Canadian Certificate	FM18CA0001
ATEX Certificate	FM19ATEX0004X
Environmental Degree of Protection	IP 64
Temperature Range	+10° C - +40° C (+50° F - +104° F)

Electrical Specifications	
Elite Cart	
Main	100-240 VAC
Frequency	50-60 Hz
Input RMS Current	.75 A Max.
Power AC Max Output	1.5 VAC / 1W
Power DC Max Output	24 VDC / 1W
External Frequency To Applicator	40 kHz.
Output To Vibrator	100-240 VAC / max. 70 W
Fuse	2.5A

Mechanical Specifications	
Controller Dimensions	
Depth	332.0 mm (13.07 inches)
Width	200.6 mm (7.89 inches)
Height	128.6 mm (5.06 inches)
Weight	6.4 Kg (14.02 lbs)
Applicator Dimensions	
Weight	458 g (Without cable and hose assembly) (15 oz.)
Length	350 mm (Flat spray nozzle) (13.7 inches)
Elite Cart Dimensions	
Depth	740 mm (29 inches)
Width	640 mm (25 inches)
Height	1160 mm (46 inches)
Weight 805700-1VBXX-XXXX	49 Kg (109 lbs)
Weight 805700-2VBXX-XXXX	56.2 Kg (124 lbs)
Weight 805700-1FHXX-XXXX	49 Kg (109 lbs)
Weight 805700-2FHXX-XXXX	56.2 Kg (124 lbs)
Pneumatic Data	
Input Air pressure	6.0 bar max. (87psig)
Compressed Air Quality According To ISO 8573.1	
Residual Water Content In Compressed Air	Max. 1.3 g/m^3 with dew point of 7° C
Residual Oil In The Compressed Air	Max. 0.1 mg/m^3
Air Flow Rate	5-20 Nm$^{3/h}$ (3-12.5 SCFM)
Regulated Output Air Pressure	0-5 bar (0-72.5 psig)

PRODUCT DESCRIPTION

The MS elite is a small stand-alone coating unit. The unit consists of a MS elite M5 manual powder spray applicator, a controller and an elite suction system or fluidized hopper with T9 pump. These items are all on a mobile cart.

The base of the cart can be configured two ways. For the vibratory box fed version, there is a vibrator, which mobilizes the powder in suspension allowing easier transport to the applicator. For the fluidized hopper, pneumatic pressure is used to mobilize the powder to allow transport to the applicator.

The elite vibratory box fed cart was designed for custom coaters and job shops that have frequent color changes and batch runs. The elite fluidized hopper cart is best suited for custom coaters and job shops that utilize single colors and long runs.

For all technical data and operating instructions on the applicator (M5), refer to product manual PA-17-08. For all technical data and operating instructions on the MS elite controller unit, refer to the appropriate manual PA-19-06.

Included with the vibratory box fed version is a quick method of cleaning powder in the supply line to the applicator. Optionally, the cart can be equipped with a second controller, a second manual powder spray applicator, which are supplied by a second dedicated pump.

This unit ships assembled with only the manual applicator connections to be finished and proper grounding. This cart assembly may at any time be integrated into an existing plant or used as a standalone pre or post-coating touch-up unit.

For single vibratory box fed applicator units, when the controller is powered and applicator trigger is activated, the vibrator motor automatically starts. For the dual vibratory box fed applicator units, when powered, the vibrator motor will automatically start when either trigger is actuated. When the applicator's trigger is released, the vibrator motor will continue to run for approximately 5 seconds.

SYSTEM COMPONENTS	
Item No.	Description
1	MS Elite Controller
2	MS Elite M5 Manual Applicator
3	Vibratory Box Fed, Cart
4	Fluidized Hopper Fed, Cart

T9 INJECTOR

The T9 injector conveys powder to the applicator through the powder hose. It uses the fully adjustable feed and dosage air supplied from the MS elite controller to acheive a continuous adjustable powder feed rate.

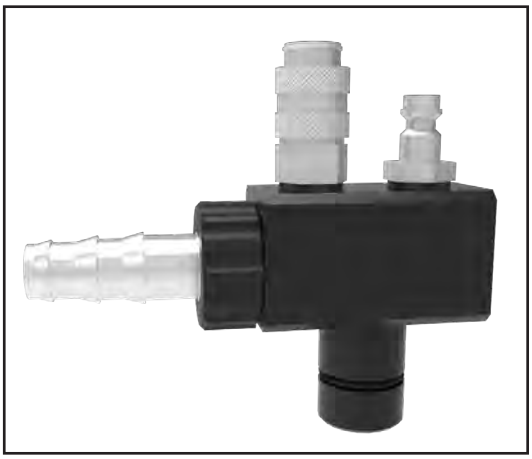

⚠ WARNING

Safety regulations and the operating instructions must be observed while connecting and operating the T9 Injector.

TECHNICAL DATA

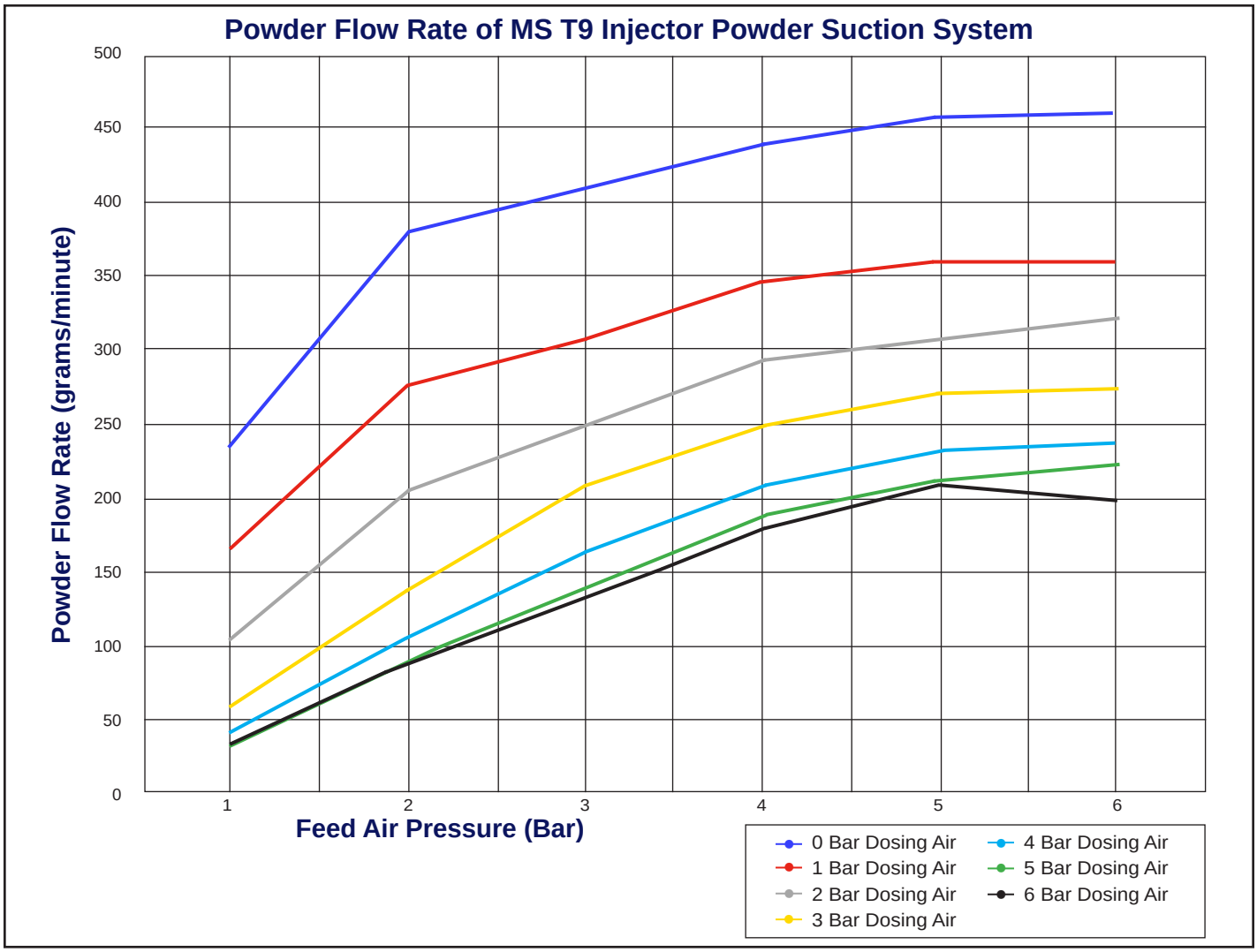

NOTICE

This graph is included to demonstrate the relationship between the pneumatic settings and the powder flow rate. The powder flow rate is also dependent on the characteristics of the powder paint being sprayed. This graph should be used as a reference to be applied to specific powder performance.

ELITE INJECTOR

The elite injector fluidizes and conveys powder to the applicator through the powder hose. It uses the fully adjustable feed and dosage air supplied from the MS elite controller to acheive a continuous adjustable powder feed rate.

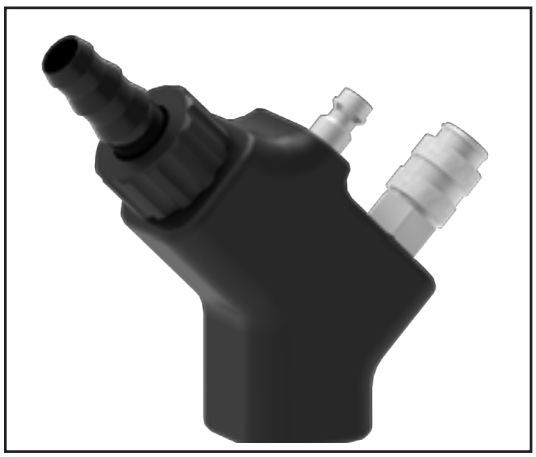

⚠ WARNING

Safety regulations and the operating instructions must be observed while connecting and operating the Elite Injector.

TECHNICAL DATA

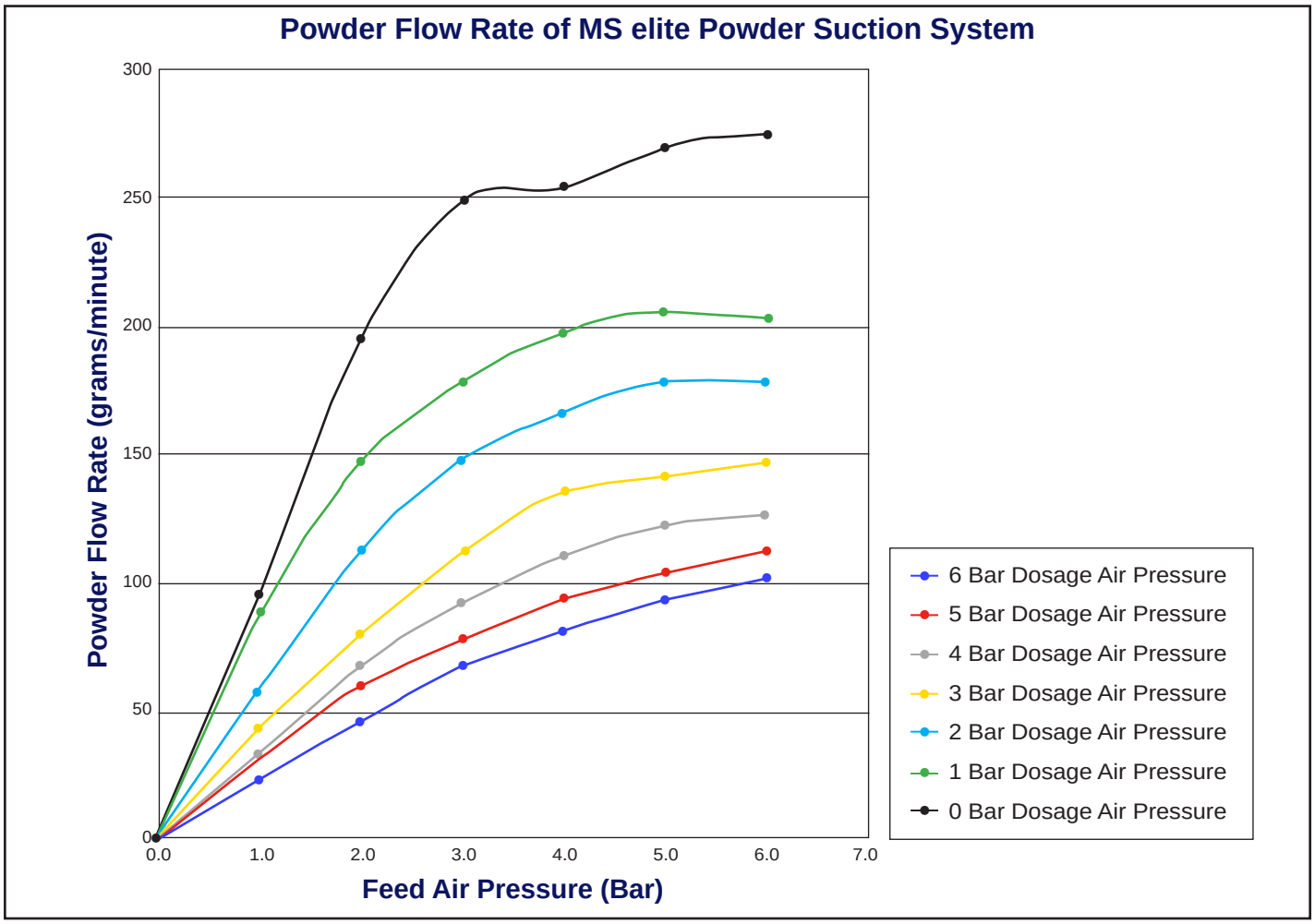

NOTICE

This graph is included to demonstrate the relationship between the pneumatic settings and the powder flow rate. The powder flow rate is also dependent on the characteristics of the powder paint being sprayed. This graph should be used as a reference to be applied to specific powder performance.

INSTALLATION

⚠ WARNING

Do not stand in front of the spray applicator!
Never point the spray applicator at a person!
Never point the spray applicator at the controller!

⚠ WARNING

All power cords must be plugged into a power source outside all classified zones.

⚠ WARNING

The unused connections on the back of the controller must be protected by supplied covers.

⚠ WARNING

The main power connection of powder coating device must be electrically interlocked with the exhaust system of the powder coating booth. The powder coating device must be switched on only when the booth exhaust air is circulating.

⚠ WARNING

The supplied ground cable (green / yellow) must be connected to the ground nut of the electrostatic manual powder coating equipment. The grounding cable must have good metallic connection with true earth ground.

NOTICE

For the operation of the powder coating system filtered dry and clean compressed air is necessary. See specifications page for air requirements.

ASSEMBLY INSTRUCTIONS

1. Unpack and remove assembly from protective foam.
2. Remove applicator from individual box.
3. Remove barb fitting from applicator by pressing the clip and pulling down on the fitting.

4. Install barb fitting into powder hose. Press to stop.

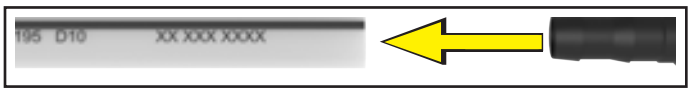

5. Connect the gun air hose to the gun air connector.

6. Press the clip on the applicator and reconnect the barb fitting with the powder hose attached.

7. Connect applicator cable. Note alignment pin. Ensure connector is fully engaged and nut is securely fastened.

NOTICE

Improper connection of the applicator cable can cause intermittent voltage and poor coating.

8. All applicator connections are now made. Place the applicator in the provided holster.

9. Remove ground cable from storage box and connect from back of controller with the thumb nut to true earth ground.

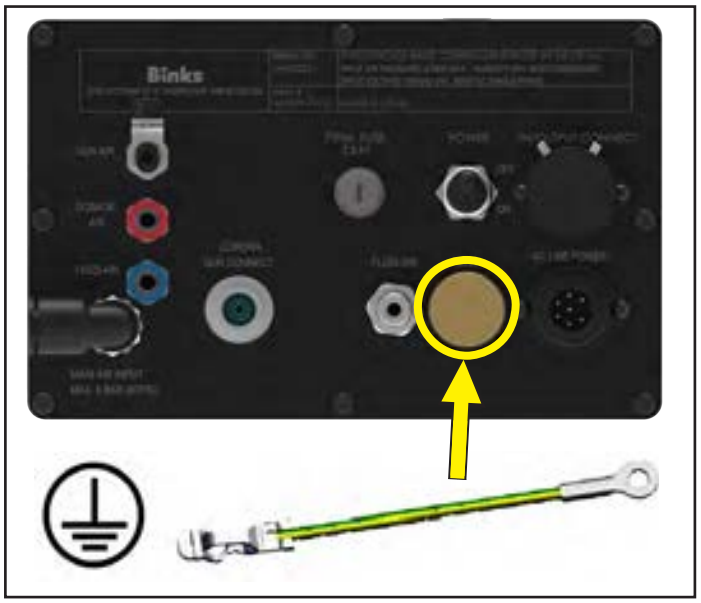

10. Ensure the fluid air fittings are plugged into the Dosage Air (Red) and Feed Air (Blue).

11. Plug in the power cord to the Line Power connector on the back of the controller. Take note of alignment pin. Tighten clockwise. Plug in the other end of the power cable to wall socket power supply outside all the classified zones.

⚠ WARNING

All power cords must be plugged into a power source outside all classified zones.

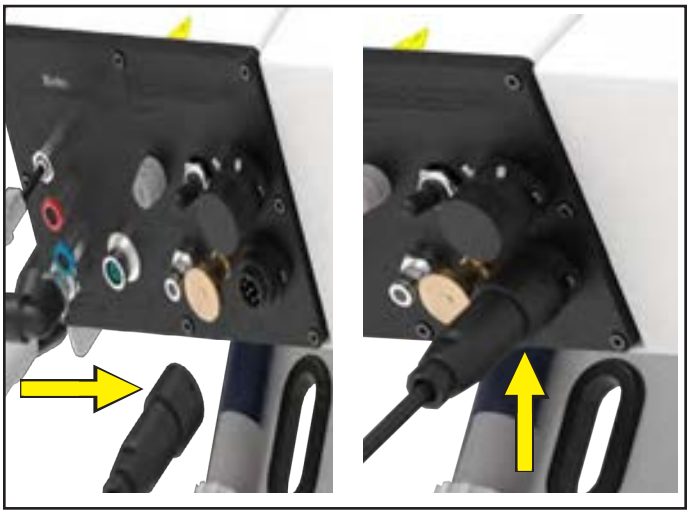

12. For the vibratory box feed option connect the main air supply to the open port of the T fitting. For the fluidized hopper feed option connect the main air supply to the open port on the regulator. Use a 1/4” BSPP/NPS (F) thread fitting (not provided).

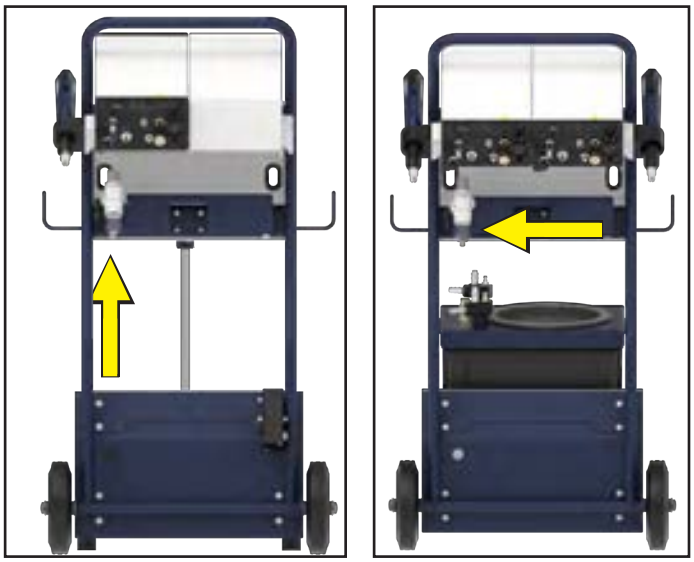

13. Turn on main air supply and adjust air regulator not to exceed 6 bar. Set gun air needle valve approximately 2-3 turns out from seated position.

NOTICE

Do not exceed 6 bar on the air regulator.

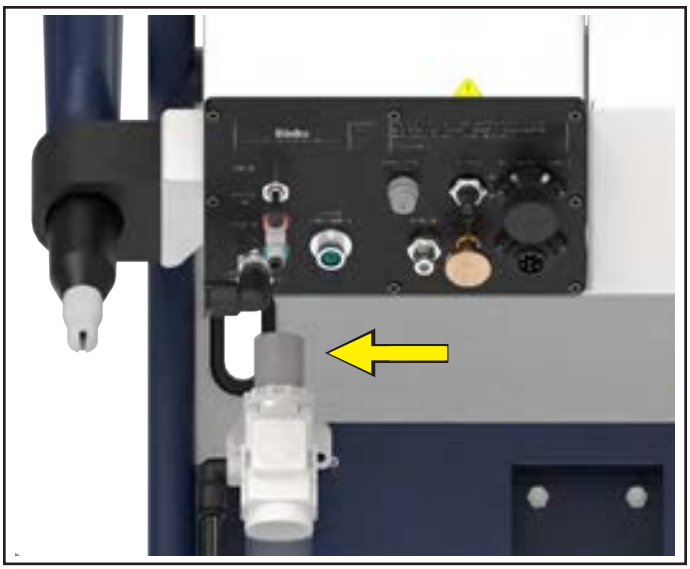

14. On the controller set voltage, feed air, dosage air and current to 0.

VIBRATORY BOX FED OPTION

NOTICE

Before starting step 15 make sure the "ON" button is activated on the controller.

15. Press the applicator trigger and ensure the gun air flows out of the applicator tip. If there is no gun air present at the tip, adjust the gun air needle valve to allow air to flow. Also, while the applicator trigger is depressed ensure the vibration table begins to vibrate.

NOTICE

Before starting step 16 make sure the "ON" button is activated on the controller.

16. Set feed and dosage air to required levels for production. Press the applicator trigger and check the brass section of the suction pipe for suction.

17. Place powder box on vibration table and insert suction pipe into box.

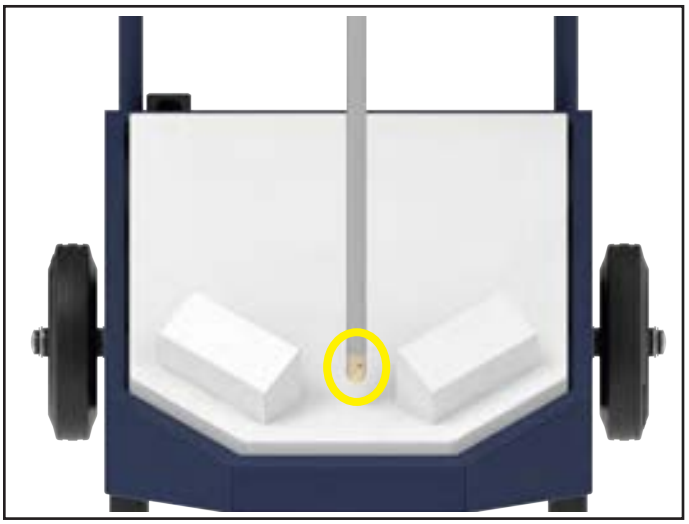

FLUIDIZED HOPPER OPTION

18. Check the fluidized hopper container to confirm air flow through the fluidized bed. If there is no fluidized bed air, adjust the needle valve on the hopper air hose to allow the fluidized bed air to flow through the fluidized bed.

NOTICE

Before starting step 19 make sure the "ON" button is activated on the controller.

19. Set feed and dosage air to required levels for production. Press the applicator trigger and check end of the suction pipe for suction.

20. Place lid onto hopper.

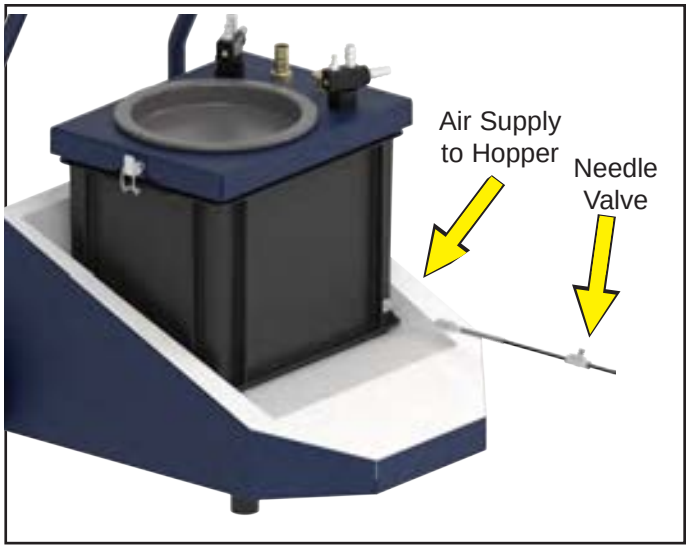

OPERATION

COLOR CHANGE CLEANING PROCESS (VIBRATORY BOX FED CARTS ONLY)

1. Lift the elite suction lance out of the holder.
2. Initiate cleaning mode from MS Elite controller.

⚠ CAUTION

The automatic applicator cleaning cycle needs to be activated before the suction lance is inserted into the cleaning valve block.

⚠ CAUTION

Make sure the applicator is pointed into the booth and that the trigger is not actuated.

3. Insert the elite suction lance into the cleaning valve block. Apply pressure to the top to hold it in place while pointing the applicator into the booth.

4. Follow the cleaning cycle instructions from the controller manual PA-19-08. The program will start and end automatically.
5. After running the cleaning cycle, replace the elite suction lance in the holder.

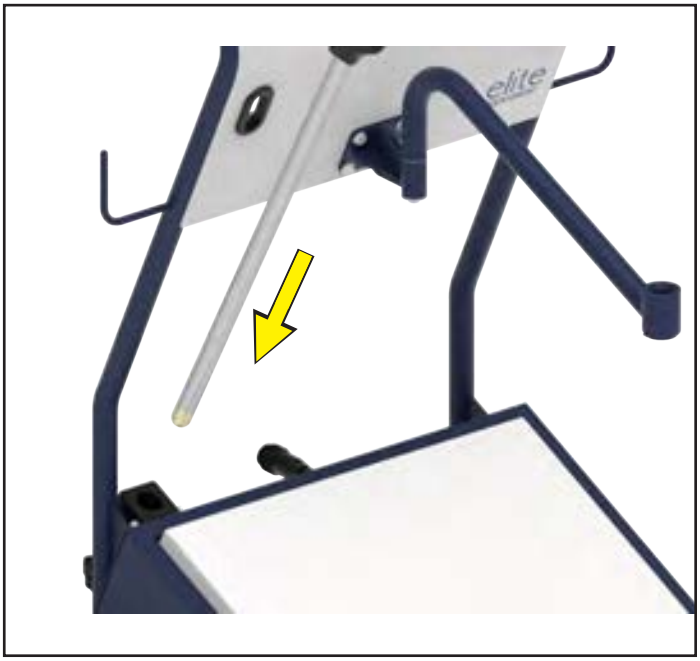

6. Clean trigger and switch components using compressed air directed into the top and bottom air pathways on the trigger. Air is introduced where the arrows are pointing.

NOTICE

Do not exceed 6 bar when cleaning the trigger and switch compnents.

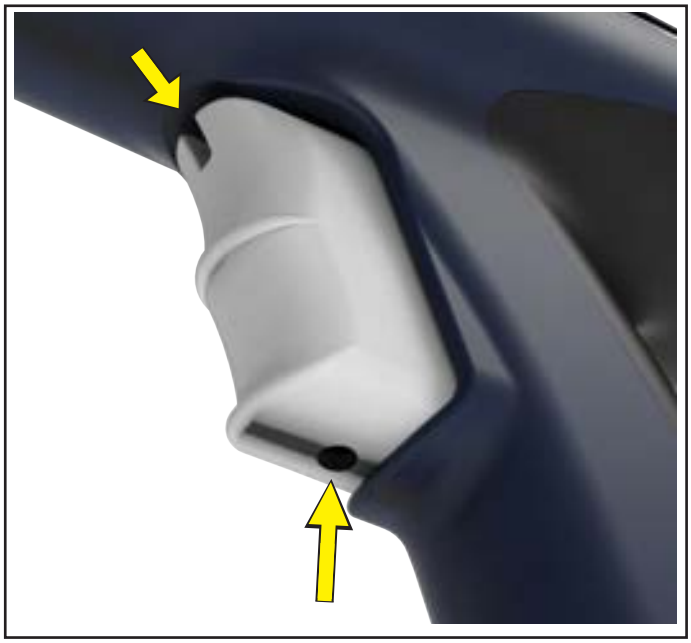

TROUBLESHOOTING GUIDE

GENERAL PROBLEM	POSSIBLE CAUSE	SOLUTION
Inconsistent Powder Cloud	Wear bar or flat spray nozzle are improperly oriented	See “Installing the Nozzle” section in PA-17-08
No Power or Air Delivery	Improper power cord connection	Check plug connections
	Improper controller/applicator cable connection	Check cable connections
	Insufficient air supply	Check main air supply
	Defective fuse on controller	Replace fuse
No Electrostatics / Poor Coverage (e.g. no wrap around, little or no powder adhesion)	Improper grounding	Check proper part and hanger grounding
	Check high voltage settings	Adjust high voltage settings
	Powder deliver rate too excessive	Decrease powder feed air to reduce excess powder volume and velocity
	Excessive humidity within powder booth air	Check humidity level, powder particles dissipate charge in humid environments
	Applicator/controller cable	Check continuity of cable and replace as needed
	Defective fuse on controller	Replace fuse
Poor Wrap Around Back Spray	Improper Grounding	Check part and hanger grounding
	Applicator too far from part	Ensure proper distance between applicator and part. Too far from part will cause applicator and operator to be coated (particles seek closest ground)
Powder Flow Rate Insufficient	Hoses kinked	Check hoses
	Air leaks in powder delivery system	Check for leaks
	Low powder level	Check power level
	Insufficient main air supply	Check main air supply
	Improper powder feed and dosage air settings	Check settings
	Powder accumulation within powder injector	Inspect and clean/replace
Spray Cloud No Longer Correct	Insufficient main air supply	Check main air supply
	Improper powder feed and dosage air settings	Check settings
	Worn nozzle system	Replace nozzle system

This page intentionally left blank.

VIBRATORY BOX FED ELITE CART

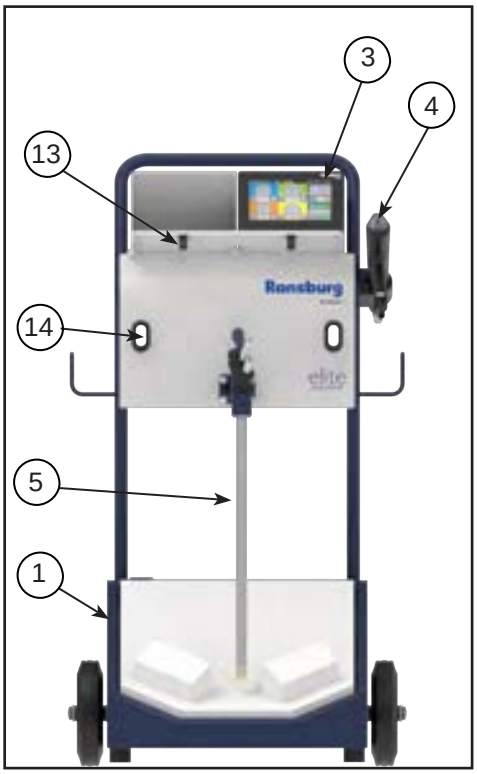

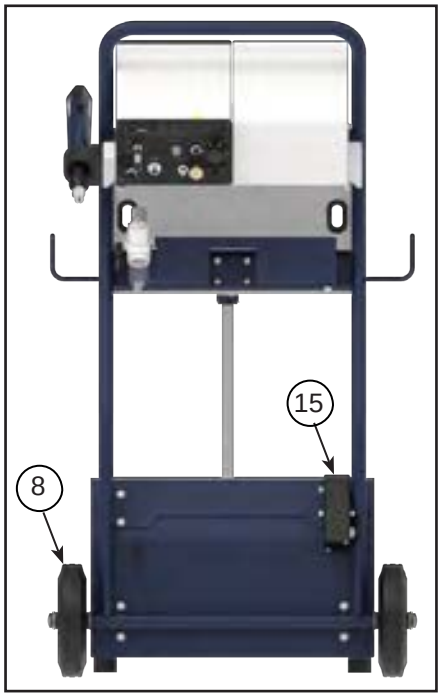

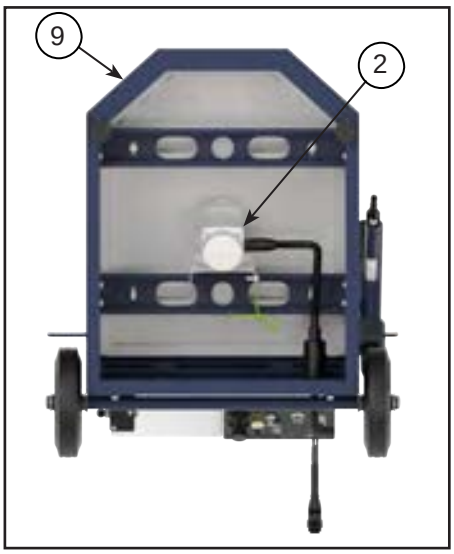

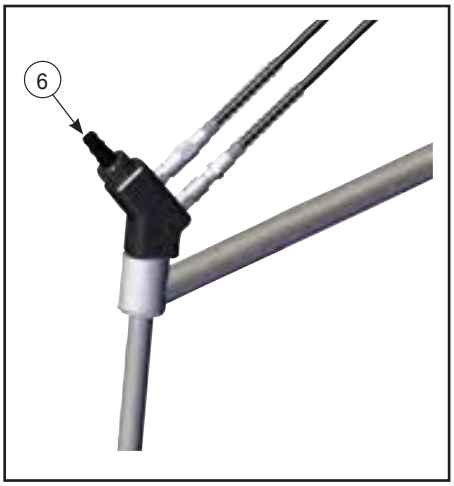

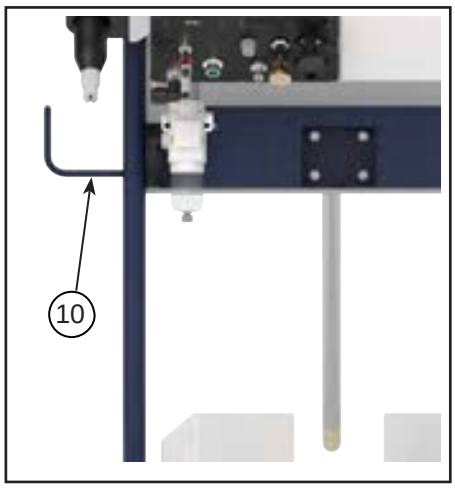

VIBRATORY BOX FED ELITE CART - PARTS LIST			
Item No.	Part No.	Description	Qty.
1	-	MS Elite Single Cart Only (Shown)	1*
	-	MS Elite Dual Cart Only	1*
2	620240	Vibration Motor 230V	1*
	620245	Vibration Motor 120V	1*
3	461959-XXXMX	Topcase Controller	1*/2*
4	615210	MS Elite M5 Applicator	1*/2*
5	806001	Complete Suction System Elite	1*/2*
6	610010	Suction Manifold Elite	1*/2*
7	471096	Applicator Holder	1*/2*
8	443932	Solid Tire	2
9	417836	Rubber Bumper	2
12	460146	Earthcable (not shown)	1
13	-	Extension Holder	2*/4*
14	471091	Cable Port Wrap	2
15	630250	Cleaning Valve Block	1

* Quantities depend upon configuration.

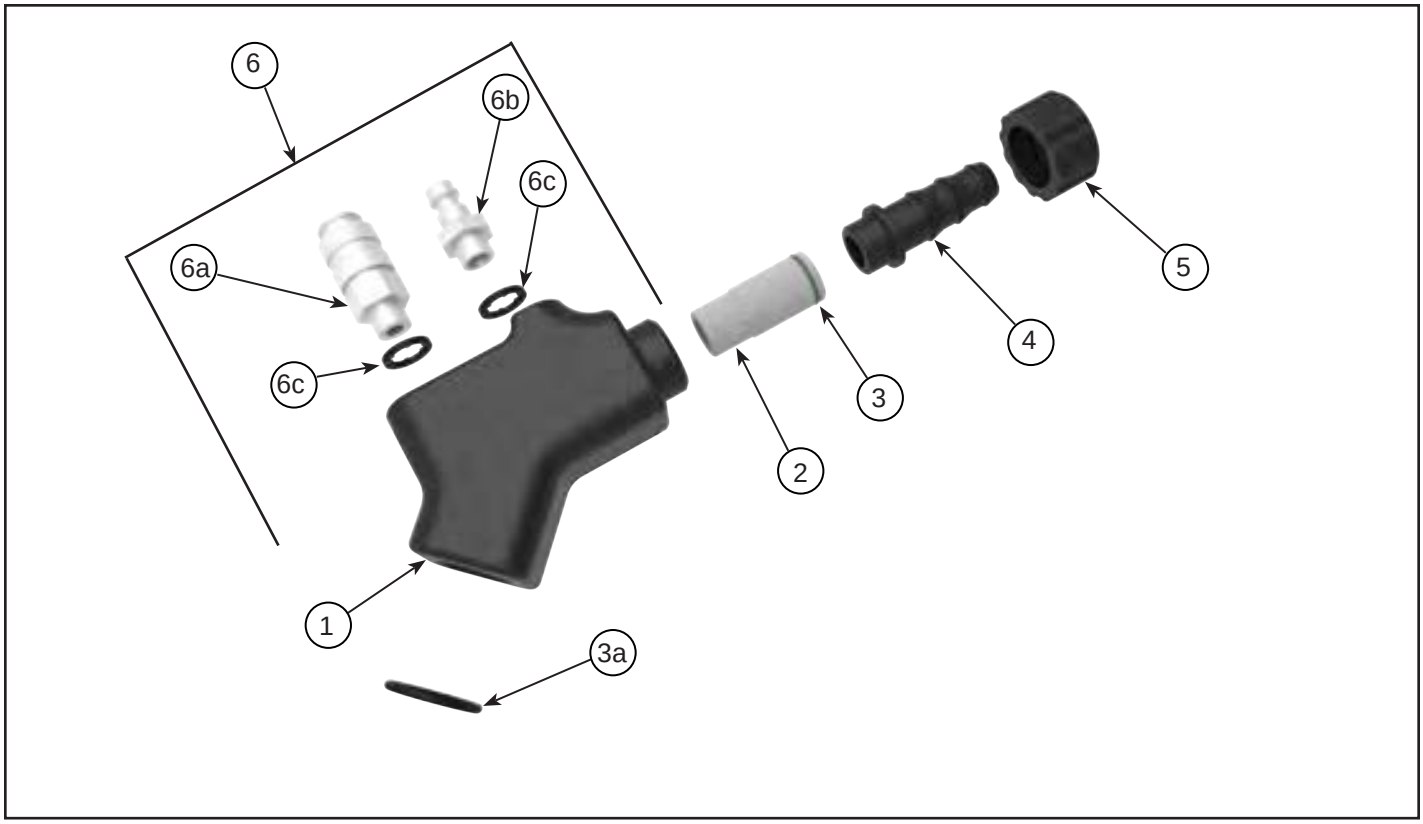

ELITE INJECTOR (610010) - PARTS LIST			
Item No.	Part No.	Description	Qty
1	471396	Main Body Intake System Elite 2.0	1
2	620257-K5, 620257-K10	Dosing Nozzle With O-Ring kit	1
3	-	O-Ring (Included in 620257)	1
3a	417223-K5	O-Ring Service Kit (Kit of 5)	-
4	426638	Powder Plug	1
5	426639	Lock Nut Intake	1
6	610060	Full Hardware Kit (Includes 6a, 6b, & 6c)	-
6a	-	Quick disconnect Male 1/8” BSPP	1
6b	-	Hose Nipple 1/8” BSPP	1
6c	-	Internal Tooth Locking Washer M9x14	2
7	610061	Male Coupler Kit (Includes 6a and 6c)	-
8	610062	Female Coupler Kit (Includes 6b and 6c)	-

NOTICE

Make sure and not overtighten the set screw.

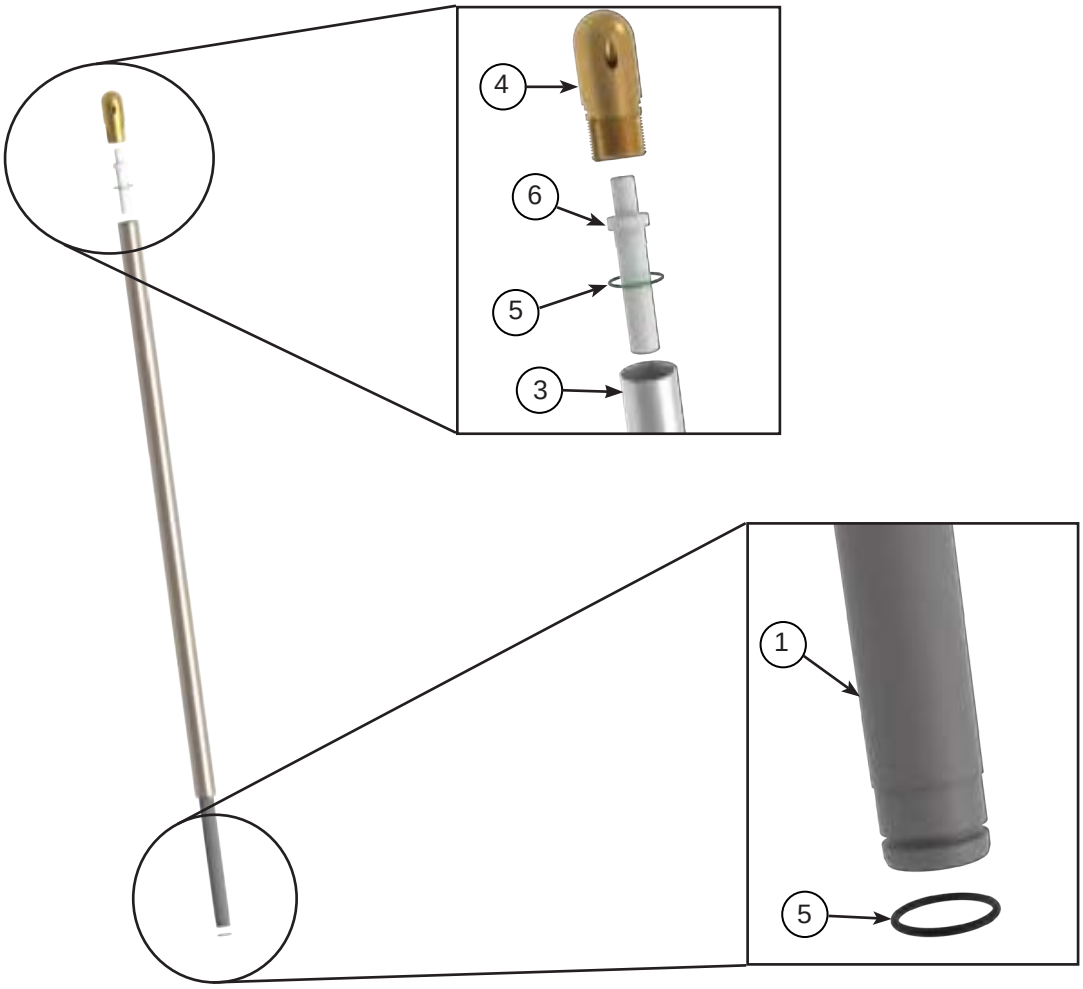

SUCTION PIPE - PARTS LIST			
Item No.	Part No.	Description	Qty
1	615127	Inner Injector Pipe with O-Ring	1
2	427061-K5, 427061-K25, 427061-K50	O-Ring kit 11x1 Viton	1
3	471395	Outer Tube with O-Ring	1
4	615126	Suction Intake with O-ring	1
5	417186-K5, 417186-K10, 471186-K25	O-Ring kit 17x1 mm	2
6	426633-K5, 426633-K10, 426633-K25	Venturi Nozzle Kit	1

FLUIDIZED HOPPER FED ELITE CART

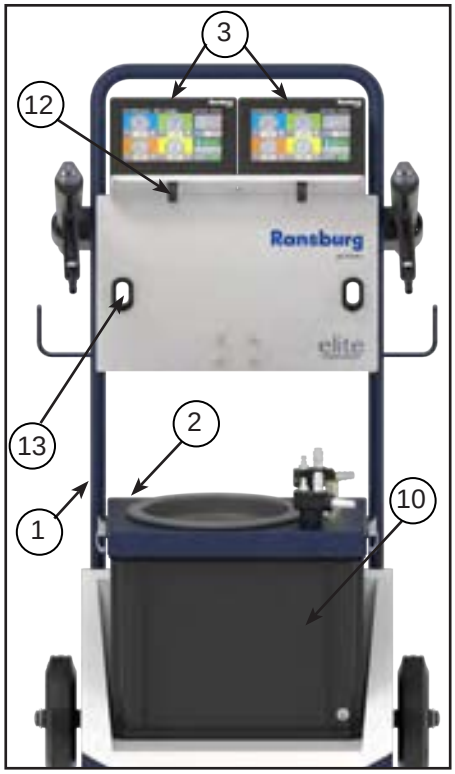

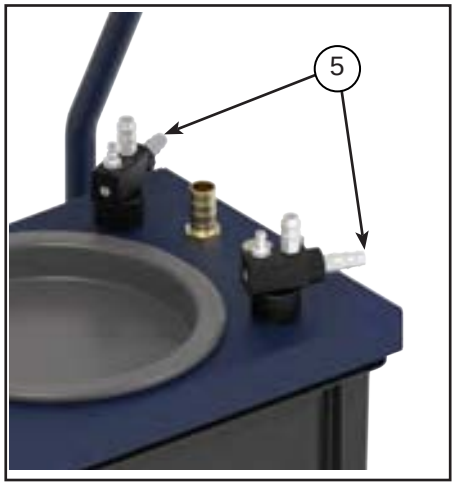

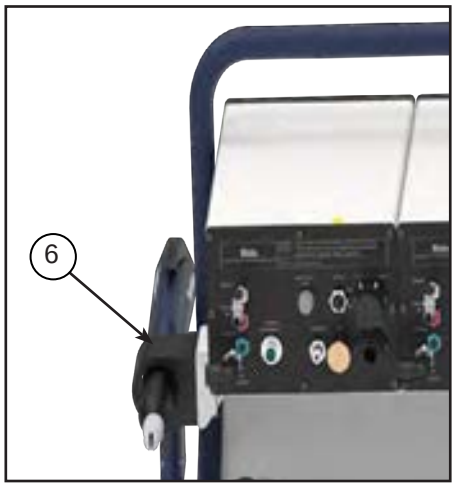

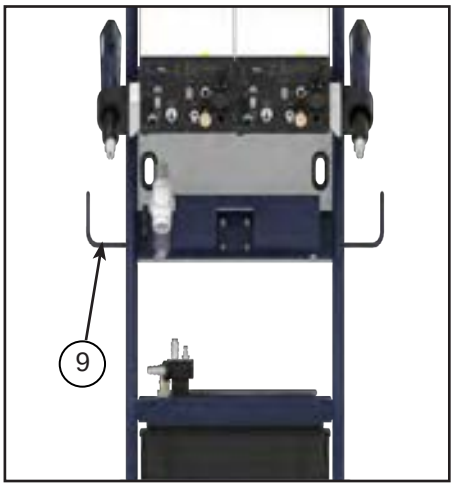

FLUIDIZED HOPPER FED ELITE CART - PARTS LIST			
Item No.	Part No.	Description	Qty
1	-	MS Elite Single Cart Only (Shown)	1*
	-	MS Elite Dual Cart Only	1*
2	805501	Single Pump Fluidized Hopper	1*
	805551	Dual Pump Fluidized Hopper	1*
3	461959-XXXMX	Topcase Controller	1*/2*
4	615210	MS Elite M5 Applicator	1*/2*
5	810263	T9 Pump	1*/2*
6	471096	Applicator Holder	1*/2*
7	443930	Solid Tire	2
8	417836	Rubber Bumper	2
11	460146	Earthcable (not shown)	1
12	-	Extension Holder	-
13	471091	Cable Port Wrap	2

* Quantities depend upon configuration.

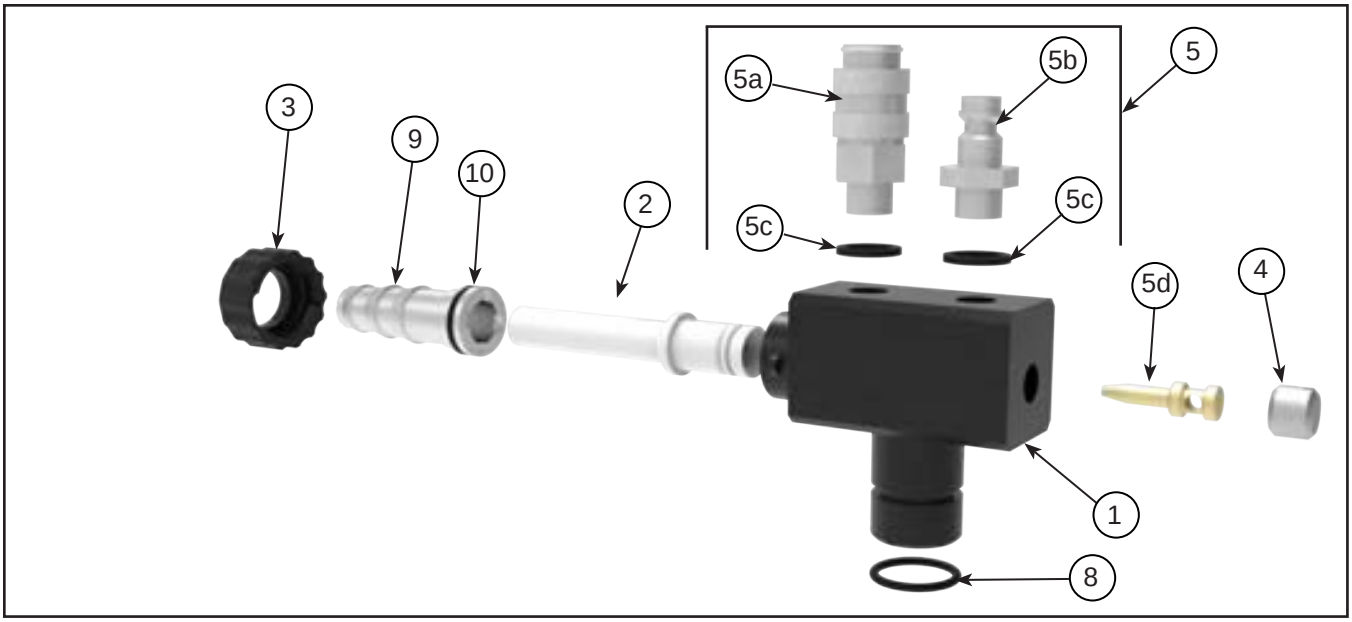

T9 INJECTOR (810263) - PARTS LIST			
Item No.	Part No.	Description	Qty
1	-	T9 Injector Body	1
2	-	T9 Injector Collecting Nozzle	1
2a	445450-K10, 445450-K25, 445450-K50, 4 4 5 4 5 0 - K100	T9 Injector Collecting Nozzle (Kit of 10, 25, 50, or 100)	1
3	445470	T9 Injector Locknut	-
4	448060	M10 x 8 Pin	1
5	610064	T9 Full hardware Kit (Includes 5a, 5b, & 5c)	-
5a	-	Quick disconnect Male 1/8" BSPP	1
5b	-	Hose Nipple 1/8" BSPP	1
5c	-	Internal Tooth Locking Washer M9x14	2
5d	445429-K5, 445429-K10	T9 Injector Needle (Kit of 5 or 10)	1
6	610061	Male Coupler Kit (Includes 5a and 5c)	-
7	610062	Female Coupler Kit (Includes 5b and 5c)	-
8	-	O-Ring	1
8a	426400-K5, 426400-K10, 426400-K25	O-Ring Kit (Kit of 5, 10, or 25)	-
9	613360	Hose Connector	1
10	-	O-Ring (Inculded in item 9)	1
10a	445141-K5, 445141-K10, 445141-K25	O-Ring Kit (Kit of 5, 10, or 25)	-

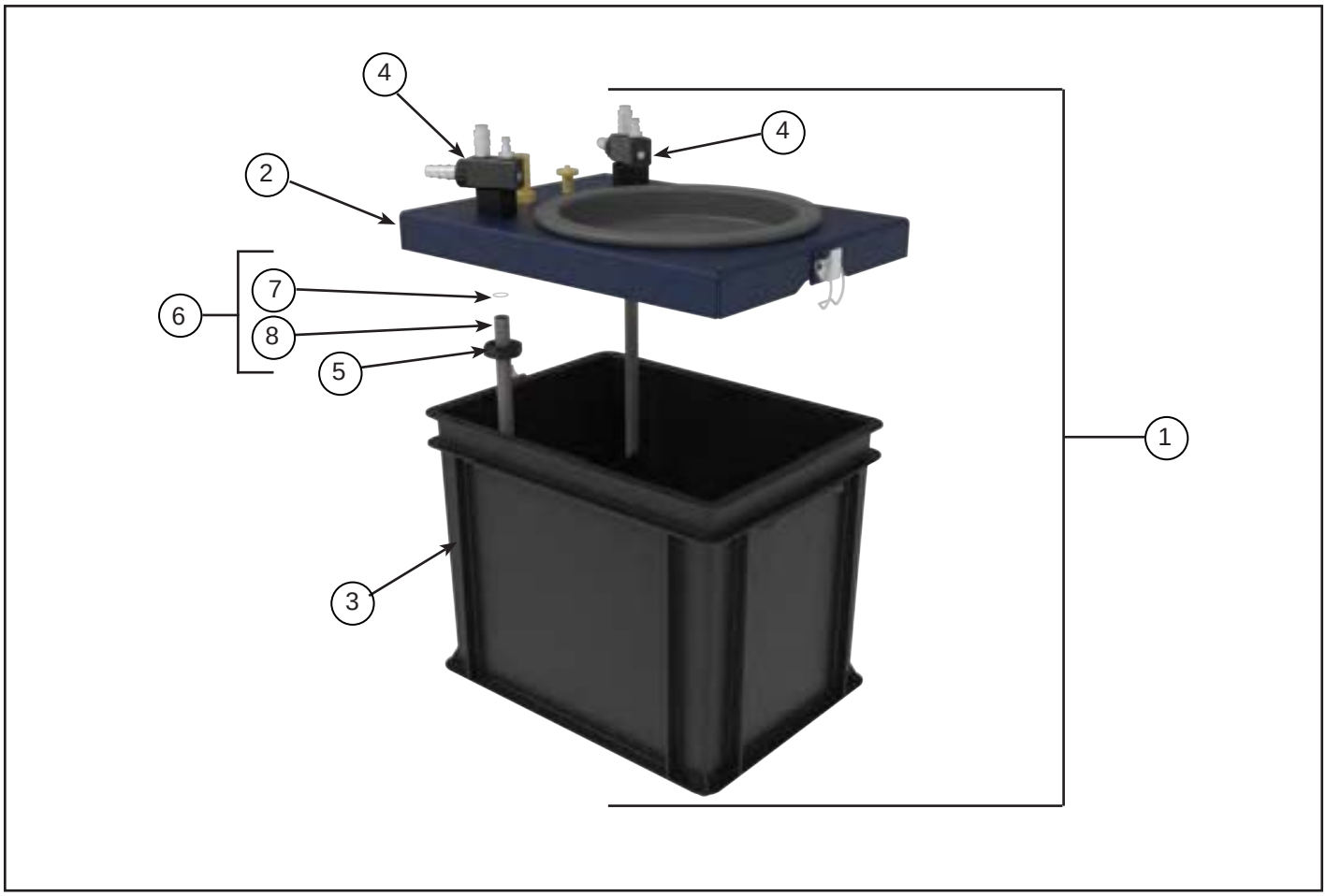

FLUIDIZED BOX (805501/805551) - PARTS LIST			
Item No.	Part No.	Description	Qty
1	805501	30L Fludizied Box Assembly (1 Injector)	1*
	805551	30L Fluidized Box Assmebly (2 Injectors) (Shown)	1*
2	-	Powder Box Lid w/ 1 Injector	1*
	-	Powder Box Lid w/ 2 Injectors (Shown)	1*
3	810280	30L Fluid Box Assembly	1
4	810263	T9 Injector	1*/ 2*
5	-	Hex Nut	1*/ 2*
6	611220	Suction Pipe Assembly (Includes O-ring)	1*/ 2*
7	-	Suction Pipe O-ring	1
8	-	Suction Pipe	1

* Quantities depend upon configuration.

POWDER HOSE SET ASSEMBLY (610139-XX)	
Part No.	Description
610139-06	Powder Hose Set, 6m/19ft
610139-10	Powder Hose Set, 10m/32ft
610139-16	Powder Hose Set, 16m/52ft
430202	Velcro Band (20mm wide)*

NOTICE

*Velcro band should not be placed within 1m of applicator connection.

POWDER HOSE ANTISTATIC (CMS-810195-XXX)	
Part No.	Description
CMS-810195-20	Powder Hose Antistatic, 20m/65ft, (10mm ID)
CMS-810195-100	Powder Hose 100m/328ft, Bulk (10mm ID)

APPLICATOR HAND CABLE (461942-XX)	
Part No.	Description
461942-06	Manual Applicator cable 6m/19ft
461942-10	Manual Applicator cable 10m/32ft
461942-16	Manual Applicator cable 16m/52ft

APPLICATOR AIR TUBING (421370-100)	
Part No.	Description
421370-100	Tube, 100m/328ft, Bulk (4mm OD, 2.5mm ID)

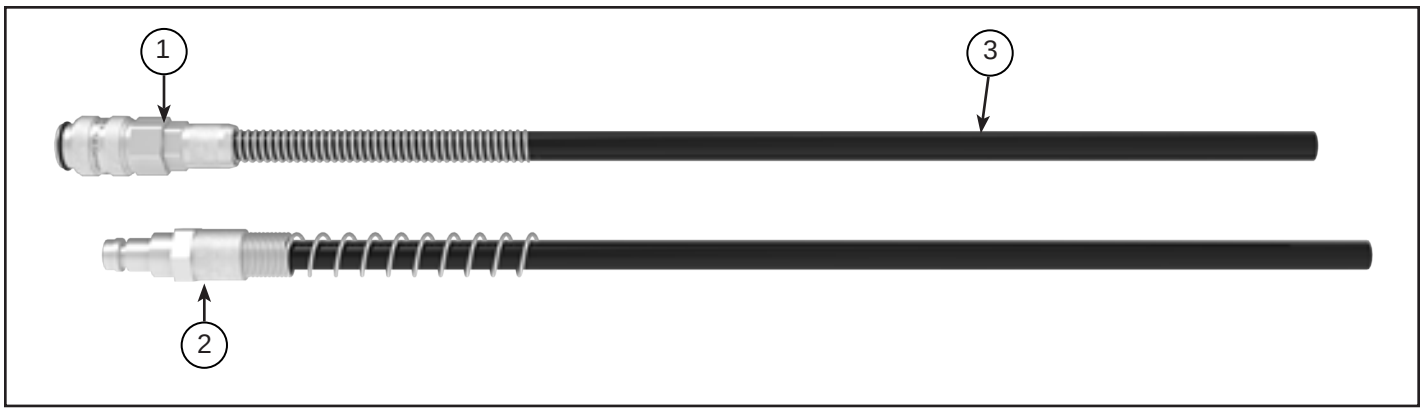

AIR HOSE (610144) - PARTS LIST		
Item No.	Part No.	Description
1	423070	Plug Clutch Antikink 8mm
2	423090	Plug Connection Antikink 8mm
3	421570-20, 421570-100	Black Antistatic Tube (8mm OD, 6mm ID)

NOTICE

When ordered as a complete assembly 610144, the hoses will be shrink wrapped together. Single applicator carts require one 610144, while dual applicator cart require two 610144.

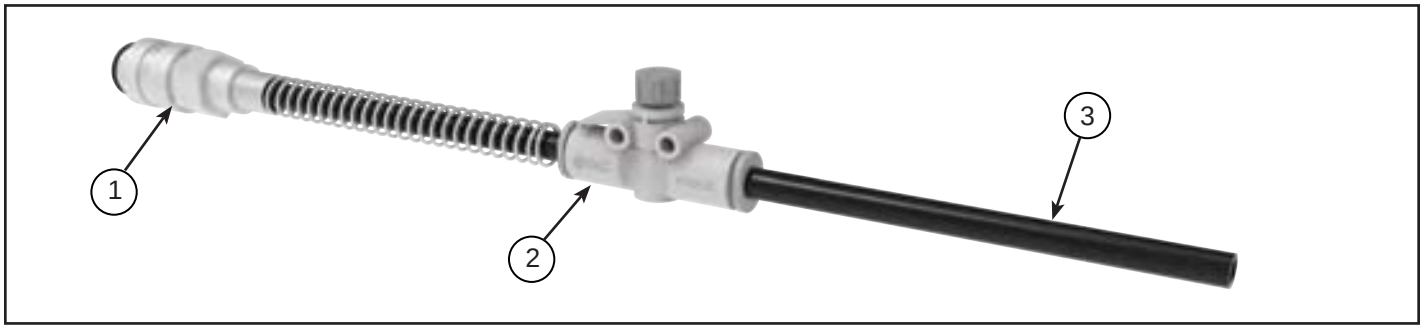

FLUIDIZED HOPPER AIR HOSE (615470) - PARTS LIST		
Item No.	Part No.	Description
1	-	Antikink Hose Assembly
2	414040	One Way Flow Control Needle Valve, 6mm
3	421590-20, 421590-100	Conductive Hose, 6mm

This page intentionally left blank.

MANUAL CHANGE SUMMARY		
Date	Description	Version
06/2025	Updated to new template, combined intoduction pages, reorganized/updated the installation steps on pages 23 and 24 for the vibratory box fed and fluidized hopper fed carts. Added a warning on page 22, multiple notices on pages 23 and 24, two cautions on page 25 and a notice on page 32. Removed the Wear Part columns and the Powder Hose Set picture with table from the Parts Identification section. Added in the following tables: Powder Hose Set Assembly, Powder Hose Antistatic, Applicator Hand Cable and Applicator Air Tubing to the Parts Identification section. Lastly, updated the Air Hose Parts List under the Parts Identification section. Updated all graphics to Binks graphics.	R7

This page intentionally left blank.

WARRANTY POLICY

This product is covered by Binks' materials and workmanship limited warranty.

The use of parts or accessories from sources other than Binks will void all warranties. Failure to follow reasonable maintenance guidance provided can invalidate the warranty.

For specific warranty information, please contact Binks.

For technical assistance or to locate an authorized distributor, contact one of our international sales and customer support locations listed below.

REGION	BINKS CONTACT
Americas	Tel: 1-800-992-4657
Europe, Africa, Middle East	Tel: +4401202571111
India	marketingroa@binks.com
China	Tel: +862133730108
Korea	Tel: +82313663303
Japan	Tel: +81457856421
Australia	Tel: +61085257555

WARRANTY PAGE

FM APPROVED c us

CE 2809

Ex

Binks

Binks is a global leader in innovative finishing technologies.
Binks reserves the right to modify equipment specifications without prior notice.
Binks®, DeVilbiss® and Ransburg® are registered trademarks of Binks US, LLC.

©2025 Binks US, LLC. All rights reserved.